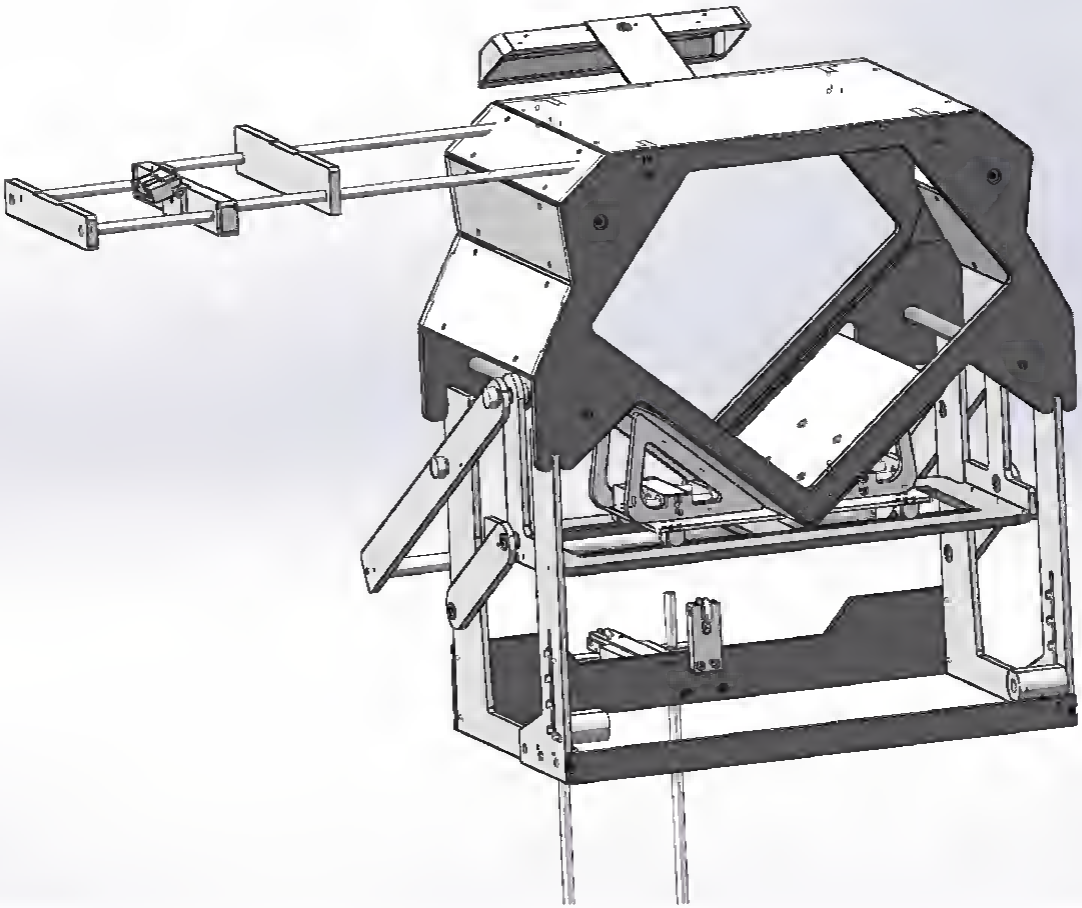

2

NEST OF HUMMING BIRD ATTACHED TO A LEAF
[illegible]

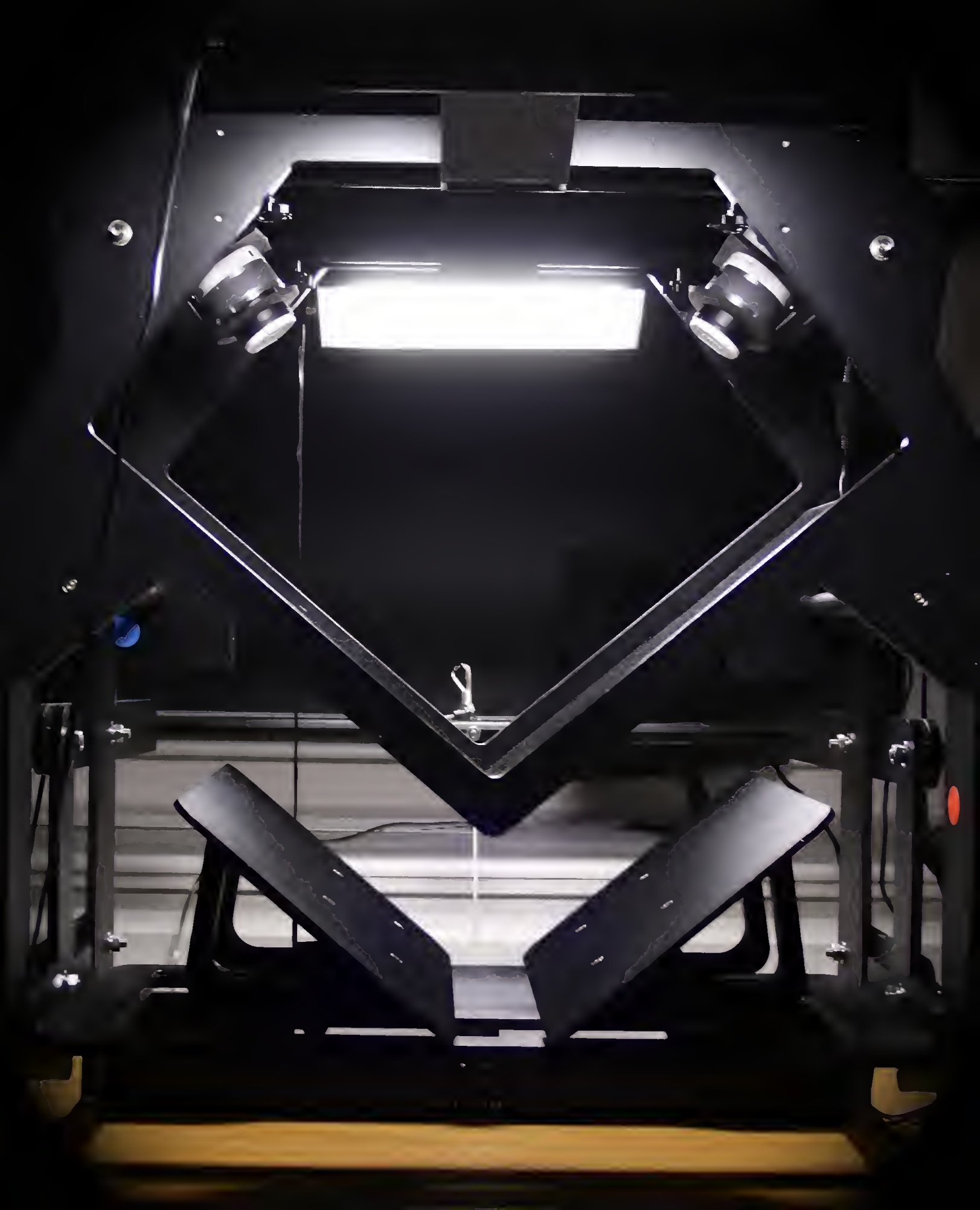

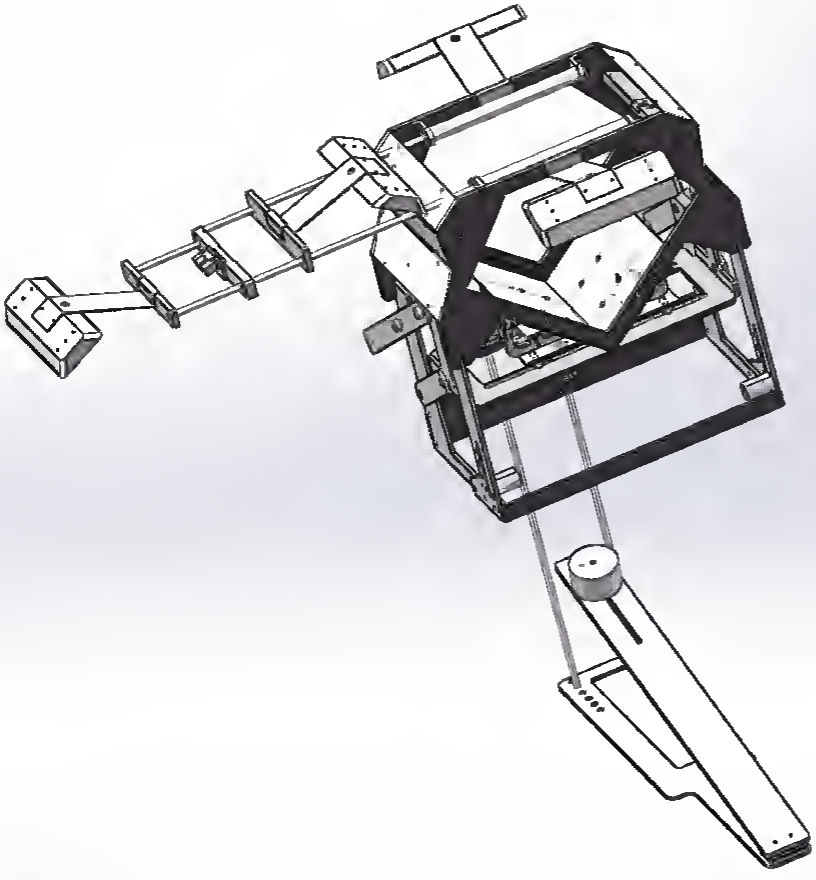

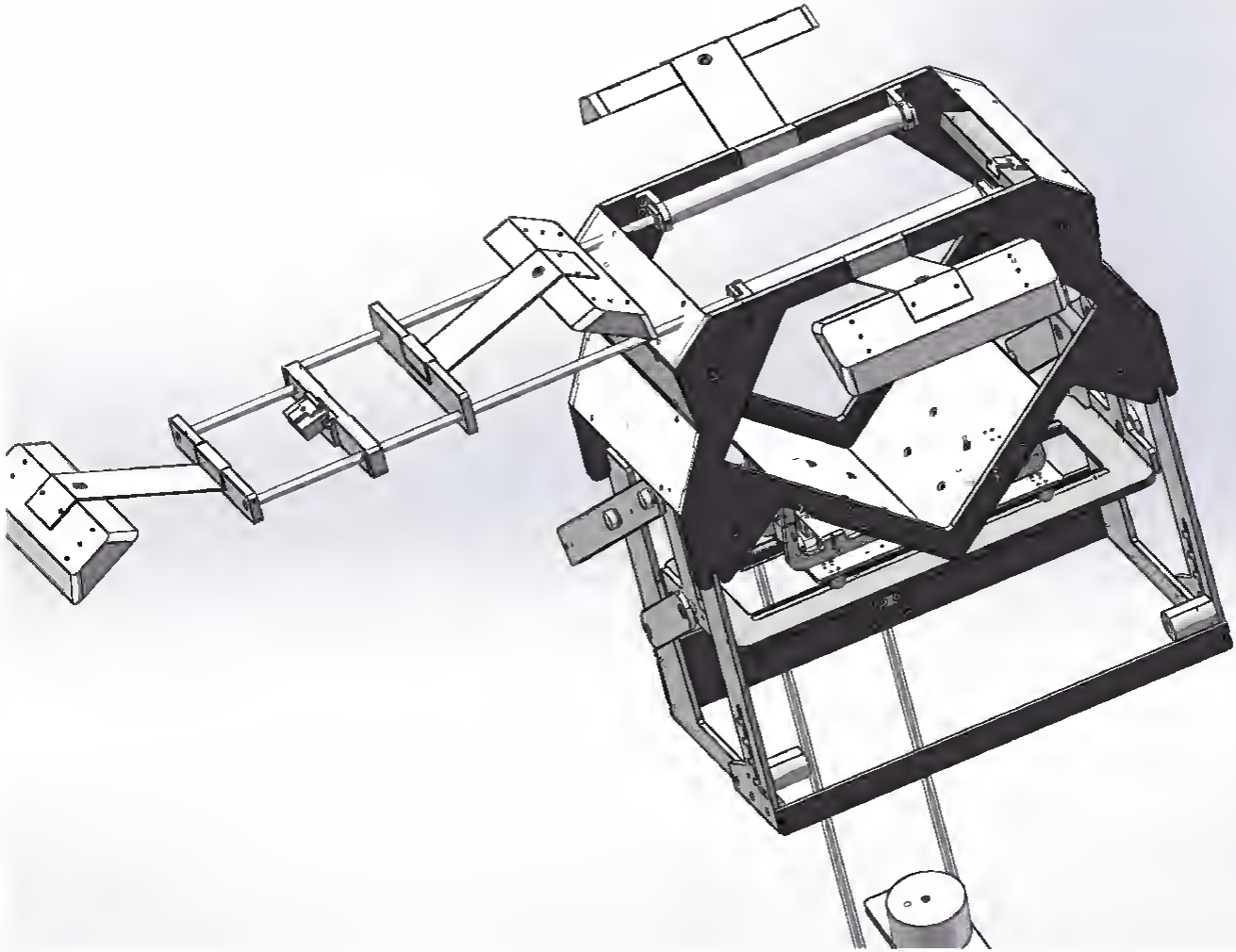

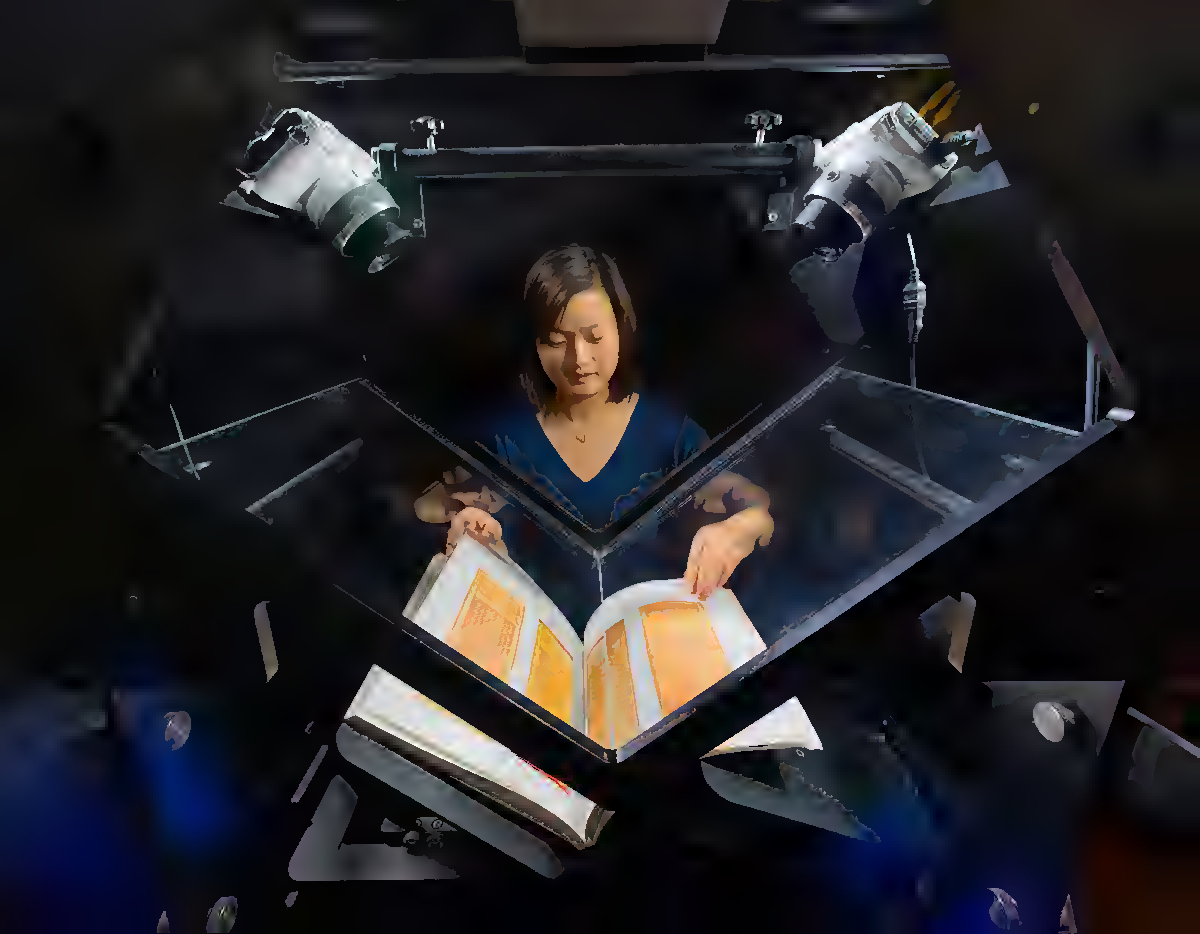

Price 5s., 35 inches by 21 inches. With 20 Illustrations, &c.

A MAP

OF

Ziemssen's Motor Points of the Human Body

(A GUIDE TO LOCALIZED ELECTRIZATION).

By HERBERT TIBBITS, M.D., &c.

LONDON J. & A. CHURCHILL, NEW BURLINGTON STREET

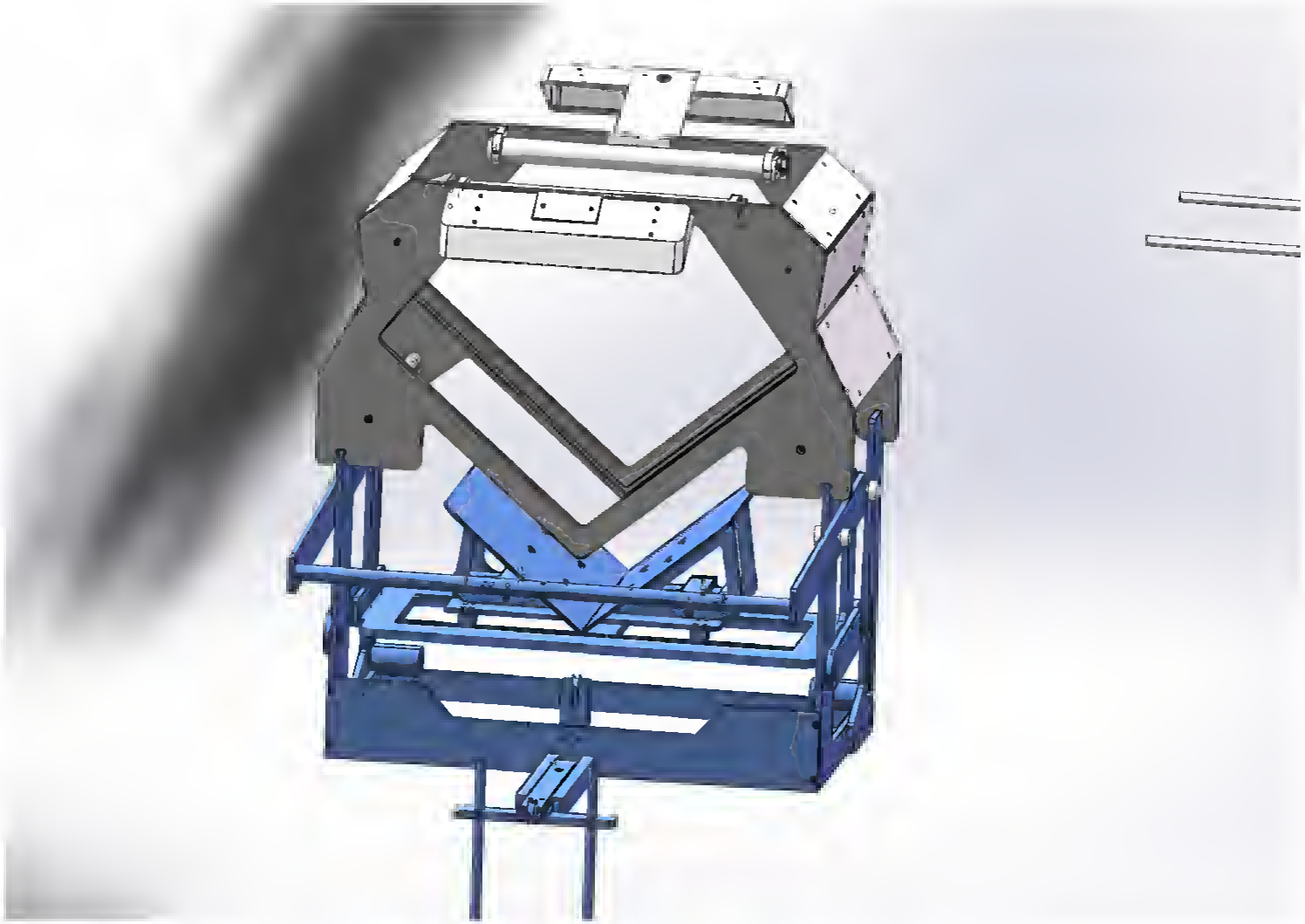

Das Leiden unsers Herren Jhesu Christi
On openlibrary.org

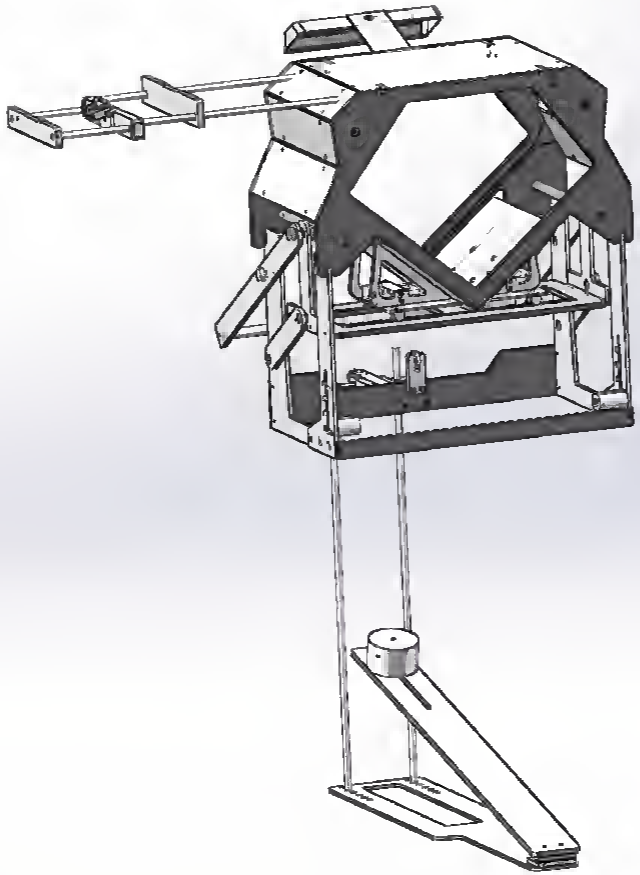

THE UNIVERSE

THE INFINITELY GREAT AND THE INFINITELY LITTLE